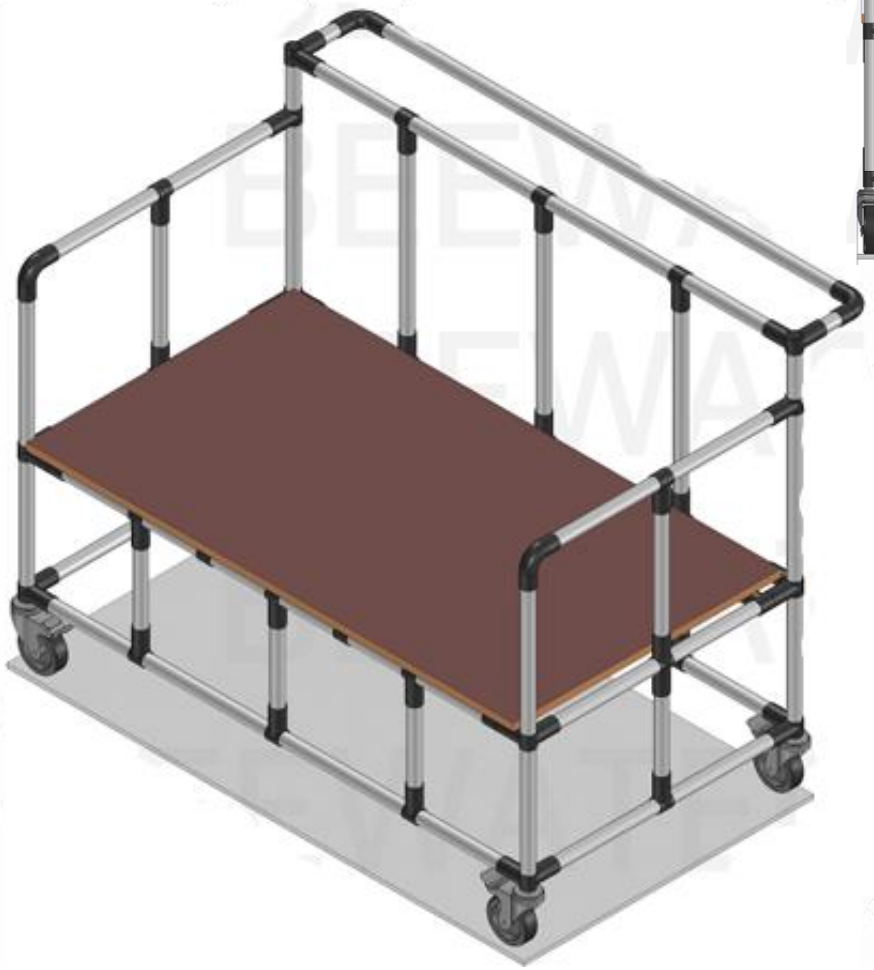

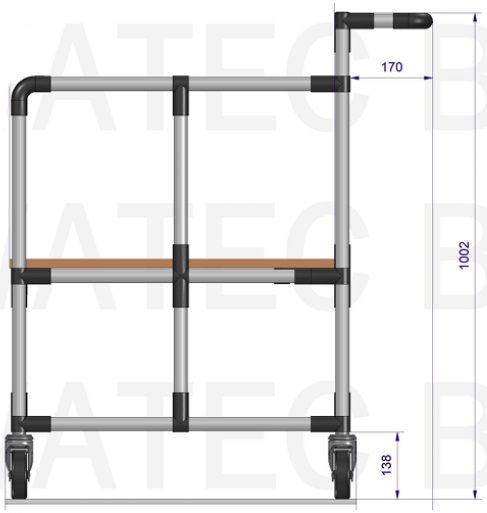

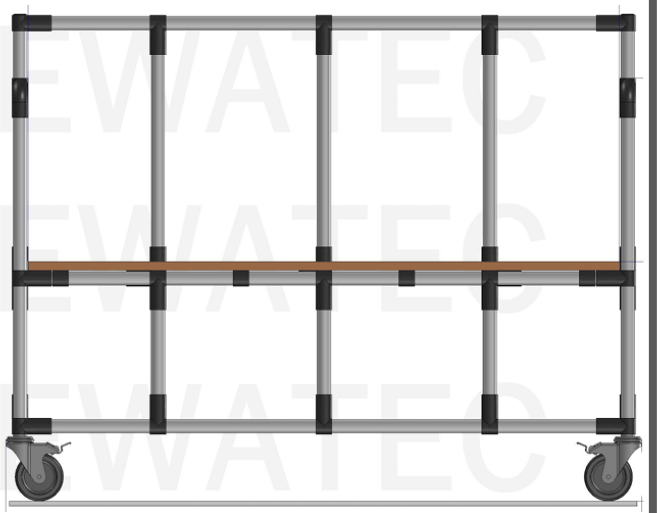

Present dimensions and specifications can be changed according to your requirements, if technically feasible. Please contact us for this purpose:

info@beewatec.com / www.beewatec.com

BEEWATEC

This drawing and the information contained herein are the sole property of BeeWaTec Group. This is not a release drawing. Illustrations shown are not relevant to the order and are not legally binding. In the event of an order, you will receive a technical drawing for approval.

Item No.: 632655

Label: Trolley for Mesh Panels